ASSEMBLIY INSTRUCTION

STEP1:

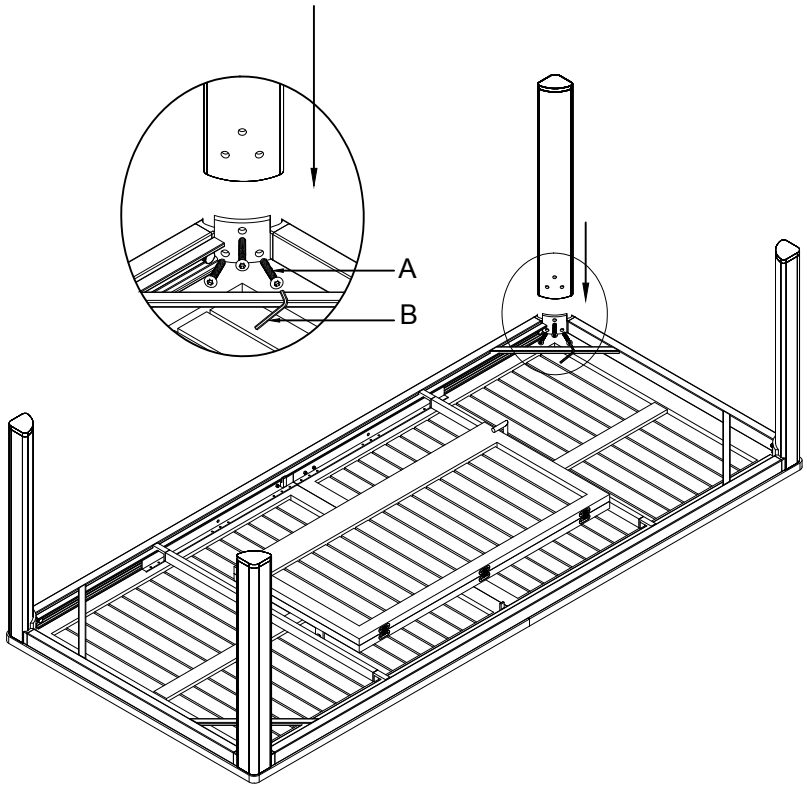

A:12PCS

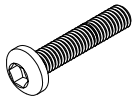

B:1PC

STEP2:

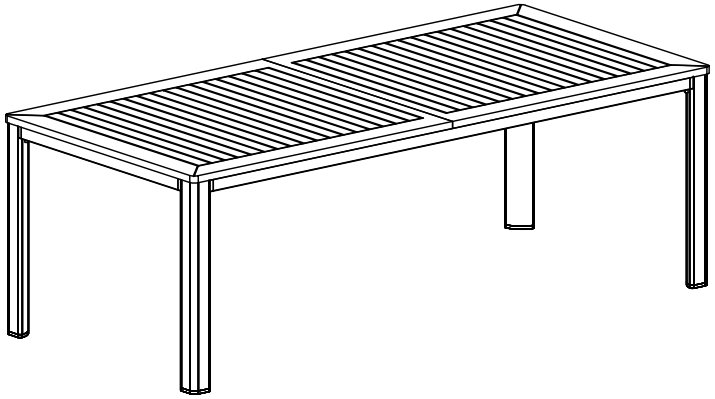
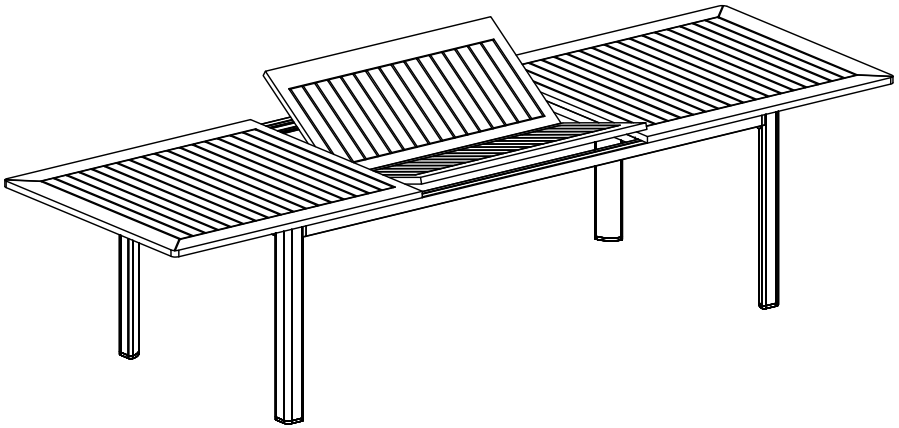
STEP3: